SPERRY UNIVAC

The computer people who listen.

VERRIERES / IMP. HUBERT (93) 20.08.65

SÉMINAIRE
U N A P E C

13 - 17 décembre 1982

Programme

SPERRY UNIVAC

INTERNATIONAL EXECUTIVE CENTRE

SPERRY UNIVAC

INTERNATIONAL EXECUTIVE CENTRE

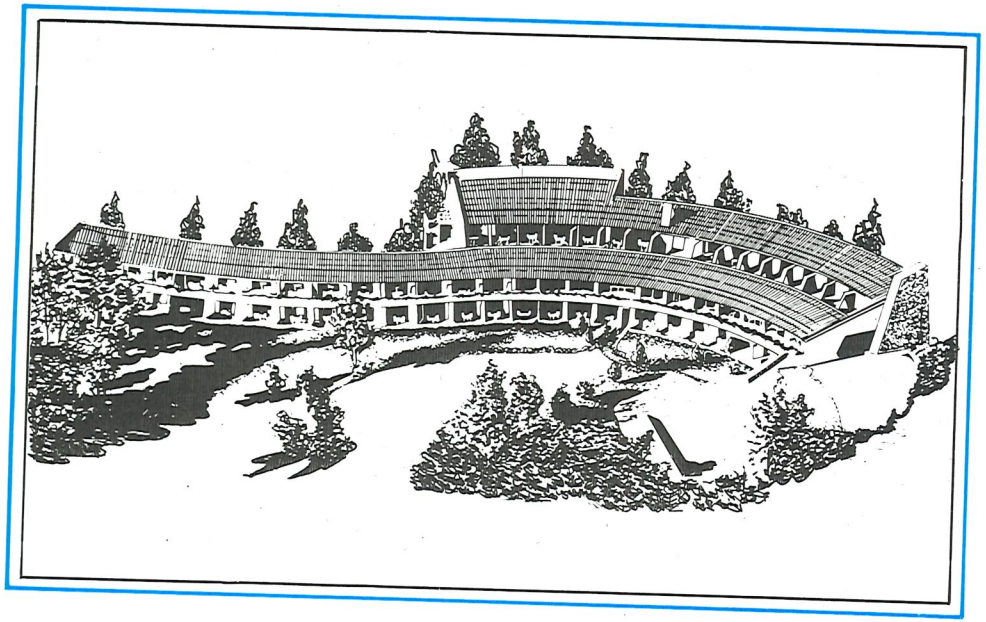

Chemin des Salettes
Boîte Postale 12
06570 Saint-Paul, France

Tel. : (93) 32.95.95
Telex : 970605 SUIEC F

LOCATION OF THE CENTRE

The Sperry Univac International Executive Centre is located in the French Riviera's Alpes-Maritimes region. It lies in the forest hills northwest of the village of Saint-Paul, some 20 km from the city of Nice.

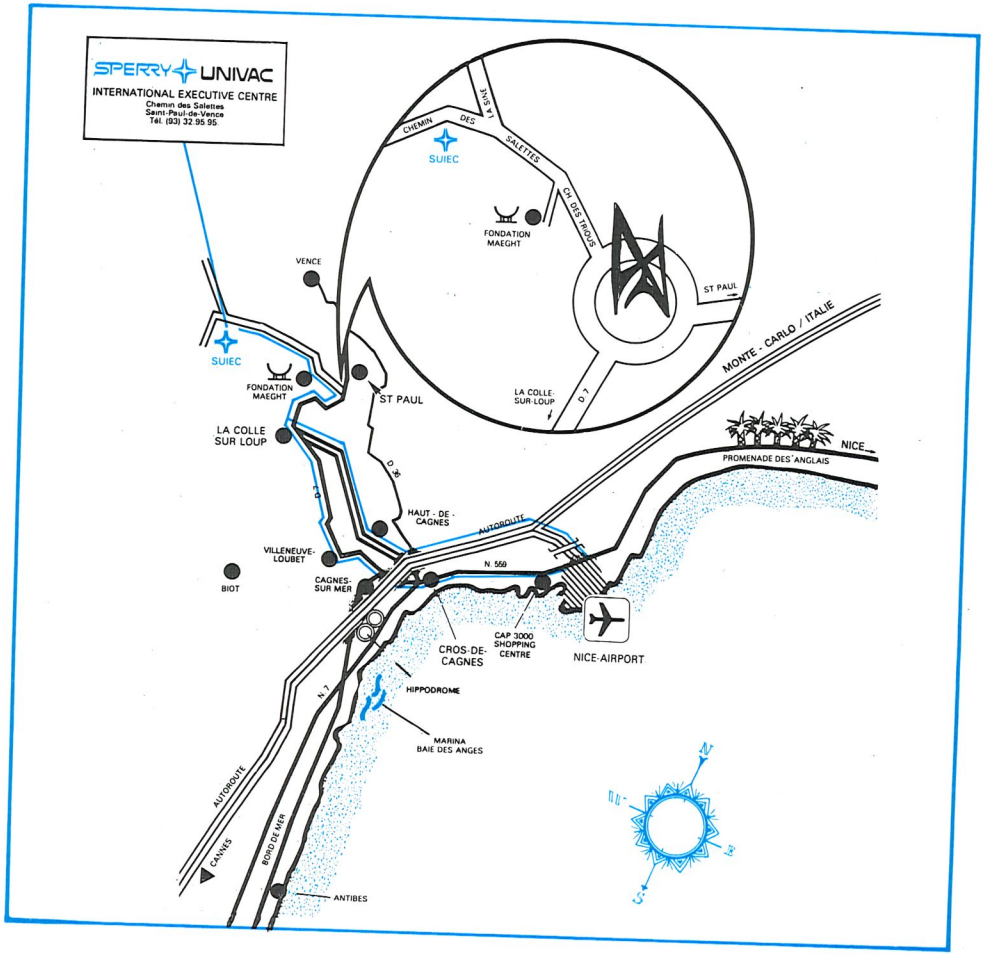

SAINT-PAUL-DE-VENCE

The mediaeval village of Saint-Paul is typical of the fortified towns which were built to keep watch over the former frontier of the Var. Famous for its ramparts which have remained remarkably intact, Saint-Paul is now also a well-known centre for artistic activity.

NOTES

SÉMINAIRE
U N A P E C

13 - 17 décembre 1982

LUNDI 13 DÉCEMBRE 1982

8 h 45 Brève présentation des objectifs du Centre International de Séminaires Sperry Univac.

Jean Hémery
SUIEC, Saint-Paul-de-Vence

9 h 00 PRÉSENTATION GÉNÉRALE DU SÉMINAIRE

Recenser et confronter les initiatives actuellement développées par l'enseignement privé français dans le domaine des applications de l'informatique à l'enseignement. Dégager les lignes de cohérence de ces initiatives. Rechercher une politique coordonnée et préparer de nouveaux projets concertés. Eclairer la recherche de ces projets par une réflexion prospective plus large sur les développements de l'informatique tant sur le plan national que sur le plan international.

Paul Aubret, François Defoort, Hervé Bouc
UNAPEC

10 h 00 Pause

10 h 15 PREMIÈRE SÉRIE DE COMMUNICATIONS

Présentation de quatre communications au choix des participants. Le colloque étant réservé à des enseignants, des formateurs ou des chercheurs déjà engagés dans des expériences informatiques, chacun des participants présentera aux autres, au cours du colloque, une communication ayant pour objet de mettre en valeur la nature de ses expériences, leur originalité technique, pédagogique ou sociale, l'évaluation qu'il en fait, les projets nouveaux qu'il souhaiterait mettre en œuvre.

11 h 15 Pause

11 h 30 PREMIÈRE SÉRIE DE COMMUNICATIONS (SUITE)

Présentation de quatre communications au choix des participants.

12 h 30 Apéritif

12 h 45 Déjeuner

15 h 00 APPROCHE D'UN GRAND SYSTÈME INFORMATIQUE A L'ÉCHELLE MONDIALE

Visite du Centre de Réservations informatisées et de gestion des passagers d'Air France à Sophia-Antipolis (Valbonne). 10 000 terminaux à travers le monde reliés par câble ou satellite au système central. Fonctionnement continu 24 h sur 24 h.

18 h 00 Retour à Saint-Paul

19 h 30 Apéritif

20 h 00 Dîner

SAINT-MARIE, Jacques

Responsable de l'introduction de l'informatique dans l'enseignement
Montréal, Québec, Canada

ainsi que d'autres conférenciers de :

Centre Mondial de l'Informatique
Délégation à l'Informatique
Ministère de l'Education Nationale

LES CONFÉRENCIERS

AUBRET, Paul

Secrétaire Général
UNAPEC
Paris, France

BOUC, Hervé

Directeur du Département Informatique
UNAPEC
Paris, France

DAVID, Brother Austin

Responsable de l'introduction de l'informatique
dans les écoles chrétiennes de la région de New York
New York, U.S.A.

DEFOORT, François

Secrétaire Général Adjoint
UNAPEC
Paris, France

DELMAS, Patrick

Maître Assistant
Université de Paris VIII
Saint-Denis, France

DESAINTQUENTIN, Jean-Marie

Responsable Promotion, Produit 1100
Sperry Univac (France)
Paris, France

HÉMERY, Jean

Directeur Financier
Sperry Univac International Executive Centre
Saint-Paul-de-Vence, France

MOREL, Raymond

Responsable de l'introduction de l'informatique
dans l'enseignement secondaire
Genève, Suisse

MARDI 14 DÉCEMBRE 1982

« LA BANALISATION DE L'INFORMATIQUE ET SON RETENTISSEMENT SUR L'ÉCOLE »

9 h 00 LE SYSTÈME LOGO

Une approche pédagogique originale de l'apprentissage du raisonnement qui veut aller au-delà de l'enseignement programmé traditionnel.

Centre Mondial de l'Informatique

10 h 30 Pause

11 h 00 LES IMPLICATIONS PSYCHOLOGIQUES ET SOCIALES DU DÉVELOPPEMENT DE L'ENSEIGNEMENT ASSISTÉ PAR ORDINATEUR

Interrogation critique sur l'informatique et la remise en cause des modes actuels d'acquisition du savoir dispensé par l'enseignement scolaire.

Patrick Delmas
Université de Paris VIII, Saint-Denis

12 h 30 Apéritif

12 h 45 Déjeuner

14 h 30 Discussion libre avec les conférenciers

15 h 30 Pause

16 h 00 TROISIÈME SÉRIE DE COMMUNICATIONS

Présentation de quatre communications au choix des participants.

17 h 00 Pause

17 h 30 TROISIÈME SÉRIE DE COMMUNICATIONS (SUITE)

Présentation de quatre communications au choix des participants.

18 h 30 Fin des exposés

19 h 30 Apéritif

20 h 00 Dîner

VENDREDI 17 DÉCEMBRE 1982

9 h 00 VERS DE NOUVEAUX PROJETS DANS L'ENSEIGNEMENT PRIVÉ

Conclusions du séminaire. Elaboration des projets pour l'année 1983 :
— formation des enseignants
— formation des formateurs

10 h 15 Pause

10 h 30 VERS DE NOUVEAUX PROJETS DANS L'ENSEIGNEMENT PRIVÉ (SUITE)

— recherche
— expériences d'enseignement assisté par ordinateur
— banque de données

12 h 30 Apéritif

12 h 45 Déjeuner

15 h 00 Départ pour l'aéroport

14 h 30 Discussion libre avec les conférenciers

15 h 30 Pause

16 h 00 DEUXIÈME SÉRIE DE COMMUNICATIONS

Présentation de quatre communications au choix des participants.

17 h 00 Pause

17 h 30 DEUXIÈME SÉRIE DE COMMUNICATIONS (SUITE)

Présentation de quatre communications au choix des participants.

18 h 30 Fin des exposés

19 h 30 Apéritif

20 h 00 Dîner

MERCREDI 15 DÉCEMBRE 1982

9 h 00 LA POLITIQUE DE LA FRANCE POUR LE DÉVELOPPEMENT DE L'INFORMATIQUE DANS L'ENSEIGNEMENT

Les choix techniques et pédagogiques qui sont effectués par les établissements scolaires entraînent des conséquences à long terme. Tout en gardant le droit à l'initiative et à la recherche, l'enseignement privé associé à l'état par contrat doit être informé et conscient des orientations actuelles des Pouvoirs Publics en ce domaine. Par ailleurs, le coût et le développement des didacticiels ou des banques de données rendent nécessaire une réflexion sur l'accessibilité des matériels aux produits pédagogiques les plus diversifiés.

Délégation à l'Informatique
Ministère de l'Education Nationale

10 h 30 Pause

10 h 45 LA POLITIQUE DE LA FRANCE POUR LE DÉVELOPPEMENT DE L'INFORMATIQUE DANS L'ENSEIGNEMENT (SUITE)

12 h 15 Apéritif

12 h 30 Déjeuner

14 h 30 Discussion libre avec les conférenciers

15 h 15 Pause

15 h 30 ITINÉRAIRE D'UN CONSTRUCTEUR D'ORDINATEURS

Apport de Sperry Univac à l'élaboration et la mise en œuvre des concepts de base de l'informatique.

Jean-Marie Desaintquentin
Sperry Univac (France), Paris

16 h 30 Pause

16 h 45 ITINÉRAIRE D'UN CONSTRUCTEUR D'ORDINATEURS (SUITE)

Les systèmes informatiques aujourd'hui
— autonomie des utilisateurs
— cohérence des informations
Evolution à moyen terme.

18 h 30 Fin des exposés

19 h 30 Apéritif

20 h 00 Dîner

JEUDI 16 DÉCEMBRE 1982

9 h 00 RÉALISATIONS PÉDAGOGIQUES AU CANADA, EN SUISSE ET AUX ETATS-UNIS

Jacques Sainte-Marie
Monsieur Raymond Morel
Brother Austin David

10 h 30 Pause

10 h 45 RÉALISATIONS PÉDAGOGIQUES AU CANADA, EN SUISSE ET AUX ETATS-UNIS (SUITE)

12 h 15 Apéritif

12 h 30 Déjeuner

LUNDI 13 DECEMBRE

MATINÉE

9 H - 10 H

Ouverture du colloque par Monsieur Paul AUBRET, Secrétaire Général de l'U.N.A.P.E.C., avec la participation de :
Monsieur François DEFOORT, Secrétaire Général Adjoint et
Monsieur Hervé BOUC, Directeur du Département Informatique de l'U.N.A.P.E.C.

Recenser et confronter les initiatives actuellement développées par l'enseignement privé français dans le domaine des applications de l'informatique à l'enseignement.

Dégager les lignes de cohérence de ces initiatives.

Rechercher une politique coordonnée et préparer de nouveaux projets concertés. Eclairer la recherche de ces projets par une réflexion prospective plus large sur les développements de l'informatique tant sur le plan national que sur le plan régional.

10 H - 12 H

Première série de communications par les participants :

10 h - 11 h : 4 communications au choix des participants ;

11 h - 12 h : 4 communications au choix des participants.

Le colloque étant réservé à des enseignants, des formateurs ou des chercheurs déjà engagés dans des expériences informatiques, chacun des participants présentera aux autres, au cours du colloque, une Communication ayant pour objet de mettre en valeur la nature de ses expériences, leur originalité technique, pédagogique ou sociale, l'évaluation qu'il en fait, les projets nouveaux qu'il souhaiterait mettre en oeuvre.

-0-0-0-

LUNDI 13 DECEMBRE

APRÈS-MIDI

15 H - 18 H

Approche d'un grand système informatique à l'échelle mondiale

Le Centre des réservations informatisées et de gestion du parc aéronautique d'AIR-FRANCE à Sophia-Antipolis (VALBONNE).

Fonctionnement continu 24 h sur 24 d'un système comportant à travers le monde 10.000 terminaux, reliés par satellite à l'unité centrale.

-0-0-0-

MARDI 14 DECEMBRE

MATINÉE

LA BANALISATION DE L'INFORMATIQUE ET SON RETENTISSEMENT SUR L'ÉCOLE

9 H - 10 H 30

Le système "LOGO"

avec la collaboration du Centre Mondial de l'Informatique.

Une approche pédagogique originale de l'apprentissage du raisonnement qui veut aller au-delà de l'enseignement programmé traditionnel.

11 H - 12 H 30

Les implications psychologiques et sociales du développement de l'enseignement assisté par ordinateur,

par Monsieur Patrick DELMAS, Maître assistant à l'Université de Paris VIII (Saint-Denis).

Interrogation critique sur l'informatique et la remise en cause des modes actuels d'acquisition du savoir dispensé par l'enseignement scolaire.

-0-0-0-

MARDI 14 DECEMBRE

APRÈS-MIDI

DIALOGUE ET COMMUNICATIONS

14 H 30 - 15 H 30

Libre discussion avec les conférenciers du matin.

16 H - 18 H 30

Deuxième série de communications présentées par les participants

16 h 00 - 17 h 00 : 4 communications au choix

17 h 30 - 18 h 30 : 4 communications au choix

-0-0-0-

MERCREDI 15 DECEMBRE

MATINÉE

LA POLITIQUE DE LA FRANCE POUR LE DÉVELOPPEMENT DE L'INFORMATIQUE À L'ENSEIGNEMENT

9 H - 12 H 30

avec la collaboration : - de la Délégation à l'informatique
- et du Ministère de l'Education Nationale

Les choix techniques et pédagogiques qui sont effectués par les établissements scolaires entraînent des conséquences à long terme. Tout en gardant le droit à l'initiative et à la recherche, l'enseignement privé associé à l'Etat par contrat doit être informé et conscient des orientations actuelles des Pouvoirs Publics en ce domaine. Par ailleurs, le coût et le développement des didacticiels ou des banques de données rendent nécessaire une réflexion sur l'accessibilité des matériels aux produits pédagogiques les plus diversifiés.

-0-0-0-

MERCREDI 15 DECEMBRE

APRÈS-MIDI

ITINÉRAIRE D'UN CONSTRUCTEUR D'ORDINATEURS :
SON RÔLE DANS LES CONCEPTS DE BASE DE L'INFORMATIQUE
ET L'ÉVOLUTION DES TECHNIQUES ET SYSTÈMES

15 H 30 - 18 H 30

avec la collaboration de Monsieur Jean-Marie DESAINQUENTIN,
Directeur à la Société SPERRY-UNIVAC.

-0-0-0-

JEUDI 16 DECEMBRE

MATINÉE

RÉALISATIONS PÉDAGOGIQUES AU CANADA, EN SUISSE ET AUX ÉTATS-UNIS

9 H - 12 H 30

avec la collaboration de :

- Brother Austin DAVID,
  Archidiocèse de NEW-YORK (U.S.A.)

- Monsieur MOREL,
  Centre de Calcul de l'Enseignement Secondaire - GENEVE (SUISSE)

- Monsieur Jacques SAINTE-MARIE,
  Département des Technologie de l'Education
  Université LAVAL
  (CANADA)

-0-0-0-

JEUDI 16 DECEMBRE

APRÈS-MIDI

DIALOGUE ET COMMUNICATIONS

14 H 30 - 15 H 30

Libre discussion avec les conférenciers du matin.

16 H - 18 H 30

Troisième série de communications présentées par les participants

16 h 00 - 17 h 00 : 4 communications au choix

17 h 30 - 18 h 30 : 4 communications au choix

-0-0-0-

VENDREDI 17 DECEMBRE

VERS DE NOUVEAUX PROJETS DANS L'ENSEIGNEMENT PRIVÉ

9 H - 12 H 30

- Conclusions du colloque.

- Elaboration des projets pour l'année 1983 :

    1. Formation des enseignants
    2. Formation des formateurs
    3. Recherche
    4. Expériences d'enseignement assisté par ordinateur
    5. Banques de données

-0-0-0-

INTRODUCTION DE L'INFORMATIQUE DANS L'ENSEIGNEMENT SECONDAIRE EN SUISSE ET A GENEVE

Bref résumé des thèmes abordés

1. Le Groupe suisse de coordination en informatique pour l'enseignement secondaire (origine, mandat et réalisations)

2. L'expérience du projet des "24 heures" d'informatique

3. Situation en matière d'informatique et d'enseignement à Genève pour l'enseignement secondaire

4. Le Centre de calcul électronique de l'enseignement secondaire (CCEES)
   - description des moyens, des activités et des réalisations dans les domaines suivants :
     - initiation à l'informatique
     - utilisation didactique de l'ordinateur

5. Difficultés rencontrées pendant et après 13 ans d'expérience

6. La problématique et/ou les questions sous-jacentes à l'introduction de l'informatique dans l'éducation.

Raymond MOREL

RM/mmf

29.11.1982

PROJET

CADRE GENERAL
DES ORIENTATIONS DE L'U.N.A.P.E.C.
POUR LE DEVELOPPEMENT DES APPLICATIONS
DE L'INFORMATIQUE A L'ENSEIGNEMENT

I. FORMATIONS DIRECTES

NIVEAU DE FINANCEMENT / PUBLIC	BUDGET DE REFERENCE DE CHAQUE ETABLISSEMENT	BUDGET REGIONAL DE L'A.R.P.E.C.	BUDGET SPECIAL DE L'U.N.A.P.E.C.
FORMATEURS	+	++	+++
ENSEIGNANTS	+++	++	+
ELEVES (clubs ...)	En principe, l'U.N.A.P.E.C. n'a pas la possibilité juridique d'intervenir.		

II. RECHERCHE PEDAGOGIQUE

1. Limite d'intervention possible de l'U.N.A.P.E.C. :

Les initiatives soutenues doivent concourir à la formation.

2. Niveau de financement le plus fréquent :

Budget spécial de l'U.N.A.P.E.C. (2.400.000 F en 1982, pour l'ensemble de ce budget).

3. Procédure :

. Commission informatique de l'U.N.A.P.E.C. pour la définition des orientations générales ;

. présentation à l'U.N.A.P.E.C. des projets par les personnes et les groupes intéressés ;

. examen des projets par la Commission U.N.A.P.E.C. des financements nationaux ;

. décision du Conseil d'Administration de l'U.N.A.P.E.C.

4. Modalités du soutien de l'U.N.A.P.E.C. :

+++ . soutien financier d'expériences d'innovations pédagogiques ayant un intérêt général ;

\+ . mise à disposition de terminaux dans les établissements, reliés au 1100/60 de l'U.N.A.P.E.C. ;

++ . utilisation des micro-ordinateurs comme terminaux du 1100/60 de l'U.N.A.P.E.C. ;

+++ . Mise à disposition de terminaux de recherche au siège de l'U.N.A.P.E.C.

./...

5. Formes et limites du soutien de l'U.N.A.P.E.C. :

. aucune aide directe à l'acquisition des matériels ;

. aide financière au "travail de recherche" ;

. négociation en cours pour l'obtention de "congés-enseignement".

6. Thèmes de recherche :

. création de langages-auteurs ;

. création de didacticiels ;

. évaluation pédagogique ;

. coordination des matériels ; optimisation des coûts.

III. COORDINATION

1. Programmation de nouveaux Séminaires prolongeant celui de Saint-Paul-de-Vence.
2. Programmation de rencontres destinées à un public plus large et moins engagé.
3. Organisation d'équipes de recherches spécialisées.
4. Publication de travaux d'intérêt général.
5. Publication d'un bulletin d'information et d'échanges.
6. Service de conseil informatique.
7. Structure permanente des participants au Colloque de Saint-Paul-de-Vence, (Club ?, Association ?, ...).
8. Négociation pour une aide des Pouvoirs Publics (Agence de l'Informatique, ...).

IV. DEVELOPPEMENT

L'U.N.A.P.E.C. est disposée à utiliser le 1100/60 comme un serveur de logiciels et de banque de données.

TYPE D'ACTIONS A METTRE EN OEUVRE :

1. Contrats individuels de type éditeur-auteur pour la production et la diffusion :

. de langages-auteurs,

. de didacticiels à l'intérieur de l'enseignement privé,
à l'extérieur de celui-ci.

2. Constitution de banques de données :

a) diffusion par abonnement :

. soit sur des terminaux synchrones lourds,

. soit sur des "micros" reliés au serveur de l'U.N.A.P.E.C.,

. soit sur des terminaux asynchrones du type "Télétel".

b) étapes prévues du développement :

. mise en banques de données des informations juridiques et administratives de l'enseignement privé, susceptibles d'intéresser les responsables de l'enseignement privé ; (chefs d'établissement, responsables de gestion, directeurs diocésains, ...) ;

. banque d'informations spécialisées de caractère pédagogique (à l'intention des enseignants), avec mises-à-jour régulières (semaine ou quinzaine), dans toutes les disciplines (ce qui suppose la constitution d'autant d'équipes pédagogiques), avec des supports écrits complémentaires à définir ;

. banque d'informations de caractère éducatif susceptibles de toucher un public indifférencié (pédagogie familiale, ...) lorsque les terminaux de type "Télétel" seront généralisés.

3. Application à l'enseignement des possibilités de traitement de texte :

(Cette question n'est pas encore approfondie).

-o-o-o-

SPERRY UNIVAC

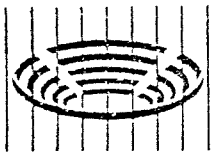

International
Executive
Centre
Saint-Paul-de-Vence
France

SEMINAIRE UNAPEC

13-17 dec '82

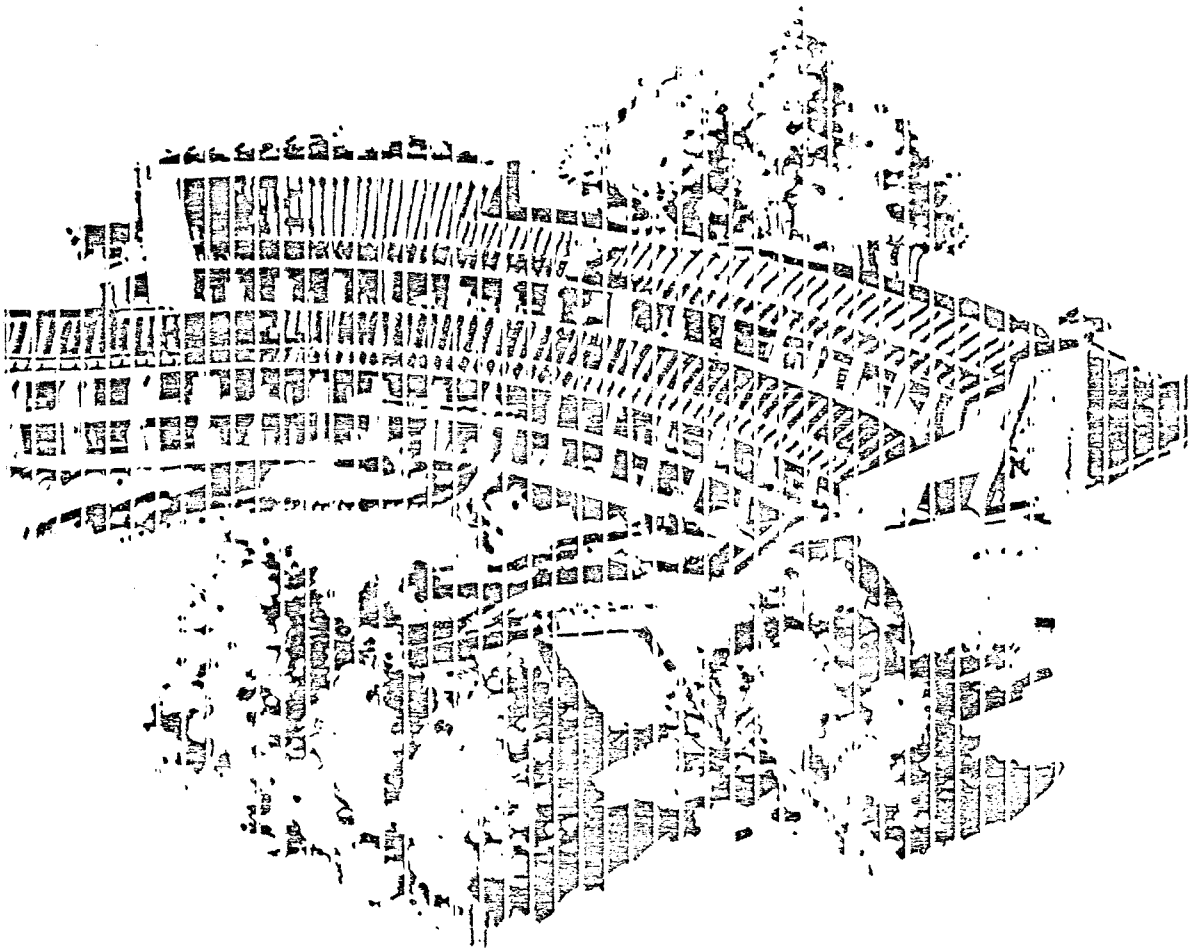

Brother Austin David, FSC, Ph.D.

THE ELECTRONIC CLASSROOM:

TECHNOLOGY AND TOMORROW'S CHILDREN

Brother Austin David, FSC, Ph.D.

Director of Research

The Pope John Paul II Center
of Prayer and Study for Peace

U.S.A..

INTRODUCTION

In the nations of the world where computer technology has proliferated, much of these nations' business, manufacturing control and information retrieval has been handled by use of computer technology. Some institutions within these nations have even been audacious enough to attempt to integrate computer technology into the instructional processes of the schools. Since a considerable portion of the educational process is information retrieval and presentation, educational technologists have attempted to exploit the capability of the computer as an information management system to develop computer assisted instruction (CAI). In the early stages of development, the HARDWARE as well as the COURSEWARE was expensive.

The advent of the microcomputer, and its distribution might well be a harbinger of better times for the use of this form of instructional technology. Also, it might be the basis of a rebirth of computer assisted instruction (CAI), because of the low cost of the technology and the requirement of a less formal instructional environment. Reduced cost indeed favors increased utilization of microcomputers in homes and remote learning centers. Thus, the diffusion across a broad spectrum of users will permit the development of instructional materials at many different physical locations, and thereby increase the potential for the discovery of a variety of instructional strategies.

Profligate of their seemingly endless resources, instructional technologists sought to individualize instruction and make instruction available to all by means of computer technology. It never happened (1).

This paper proposes a different use of the microcomputer technology to use the computer for classroom instruction rather than individualized instruction. By means of satellite communications networks could be established to use the microcomputer as an electronic blackboard or electronic textbook. Naturally, the existence of such a network would provide for individualized instruction should this be of value for an especially talented or handicapped student. The use of the microcomputer for classroom instruction has been called by this author COLLECTIVIZED CAI(2).

WHERE HAVE WE BEEN?

In a review of CAI developments in the United States in the 1960's and early 1970's, in which this author participated, we can identify seven modes of CAI.

1. Drill and Practice
2. Tutorial
3. Dialogue
4. Gaming
5. Simulation (modelling)
6. Interactive Computer (Computer Literacy)
7. Information Retrieval

There are four integral components to be identified as well.

1. Hardware
2. Software
3. Courseware
4. Peopleware

A very brief history of CAI will serve as a tool to define the relationship of these components to the seven modes of instruction Medium to large scale, time shared, computer mainframes, with large

storage and communications capability constituted the hardware nucleus around which such instructional systems were built. Under the premises that many users of the system would reduce the per capita cost of COURSEWARE construction and delivery, as well as provide individualized instruction for each student user, the time shared computer was regarded as the most viable tool. Once the commitment to individualized instruction was made, it was necessary to develop computer programs (SOFTWARE) which would monitor and evaluate student performance, and link the student to instructional segments suited to the students' performance level. Also, the communications traffic controller SOFTWARE had to be developed which activated appropriate instructional media whether this was a teletype, a cathode ray tube, a touch sensitive panel, a light pen, a voice response unit or whatever media constituted the learner's terminal (3).

The development of this computer SOFTWARE to activate the computer HARDWARE to do the correct thing at the right time was a difficult task and generally required some computer programming skill. The creation of the various versions of COURSEWRITER, PLATO, ASET and any of the various author languages by computer vendors, was an effort to develop generalized SOFTWARE systems that would circumvent the problems of developing specialized computer SOFTWARE, and enable teachers to easily prepare the course content and its presentation to the student. The development of the COURSEWARE was to be the province of the teacher. However, even with the aid of these author languages, it could take anywhere from twenty hours to 100 hours to prepare a one hour module of instruction. This time intensive and therefore costly activity precluded the large scale development of CAI systems (1,4). Basically, a strategic blunder

had been committed. PEOPLEWARE had been neglected. As often occurs with the educational profession, the technologists presented the educators with this "marvelous piece of technology which will solve all of education's problems". The slide projector, the film projector, the overhead projector, instructional television, and now the computer, all were to alter the face of education (5). Very little happened, simply because teachers will teach as they are taught. Yes, the CAI research with the young and bright, the young and emotionally disturbed, the young and unachiever; all showed CAI would teach, even if it were costly. However, in the schools of education and teachers colleges, future teachers were still learning from books. Computer technology and its instructional strategies were not incorporated into the academic baggage of the teacher. Thus, it was generally not used in the instruction of their students. That was a significant omission.

Also, it turned out that the instructional process was in fact a great deal more complex than had originally been envisioned. The application of the strategies of systems analysis to the instructional process revealed the complexities and intricacies of such instruction and learning even at the most elementary level. To produce a payroll check, a general ledger, or to target a satellite into space proved to be easier than developing instructional packages. Of course, the resources of society poured into the former activities far exceeds the resources expended on the educational process.

For a moment, let us review these modes of instruction cited above. <u>DRILL AND PRACTICE</u>: The student having been instructed by a human teacher in a particular skill, uses the computer to practice that skill whether it be spelling, language arts, grammar usage,

arithmatic, et al. Based on student performance, the computer audits student progress and directs subsequent drill/practice activity. Audit trails and achievement are recorded and used to evaluate and direct the progress of the student through the subject matter content. TUTORIAL: A student comes to the computer terminal with no knowledge of a specific topic and is instructed by the computer in that topic. The student responding to the multiple choice selections, true/false, completion, matching and entering of specifically coded responses, answers queries posed by the computer. Again, achievement is measured and recorded with the subsequent instructional modules being presented based on measured student performance. DIALOGUE: In this mode of instruction, the computer responds to the student using free form instructional dialogue in the native language of the student. The responses of the student are entered in the normal sentence structure of the student's native language. Elements of the drill/practice or tutorial modes cited above can be employed as well as some of the other modes of instruction reviewed below. In essence, the computer becomes a "user friendly" correspondent of the student informing and questioning in a free flow exchange (6). GAMING: In this mode of CAI the student interacts with the computer system playing an instructional game which subjects both the computer program and the student to the same set of rules. The student cannot make a move that the computer cannot make and vice versa. The playing of a game of checkers would typify this type of instructional mode. SIMULATION (modelling): This mode of CAI combines many of the elements above and is designed to reflect a "real life" situation

to be explored by the learner. However, the computer is programmed to impose randomly generated "catastrophes" on the "real life" situation to which the student must respond in a knowledgeable manner to successfully continue the simulation model of the "real life" learning situation under study. In such a mode of instruction a student could be following a simulation of a government model, and the computer could impose a famine on the country to examine how the student would alter the parameters to use available resources to undo the harm to the economy experiences as a result of the famine. INTERACTIVE COMPUTING: (Computer Literacy) In this mode of CAI, the student actually learns a computer language in order to write a computer program to solve a specific problem. Having identified the logic of the problem's solution (the algorithm), the student using a computer language, such as FORTRAN or BASIC, converts the algorithm into the language used by the computer. Thus the student communicates with the computer who is literate in a computer language. INFORMATION RETRIEVAL: A considerable portion of the instructional process is the presentation of information to the student. Using data base management and high level computer languages, the student (researcher) can access information stored in the computer data bases in a format which uses the computer to locate data elements corresponding to the search parameters entered by a student.

In all of the above modes of CAI, various input and output media can be employed based upon the requirements of the student. Also, during this time period (late 1960's, early 1970's), mini-computers with communications capability were employed as the HARDWARE for the instructional system in an effort to reduce the HARDWARE expense of the computer storage and delivery system.

Commercial vendors also prepared COURSEWARE packages which could be purchased or leased by school systems to instruct, remediate and/or inform students (7).

In essence, these seven modes of instruction, as chosen by this author, focused on the one to one relationship of the individual student between the learner and the computer. Each student at individual computer terminals was following the course material individually suited to the interest and achievement level of the student.

WHERE ARE WE GOING?

In the mid 1970's the technology of the microprocessor began to take hold in the United States. Many commercial enterprises began the manufacturing and sale of personal computers. Computer technology was no longer the domain of the professional and the expert. Control by the priesthood of technologists was broken, and now persons of modest means could purchase computers for their homes. This relatively inexpensive technology which can be mass produced now provides a viable alternative for educators to use computer technology as an instructional tool. However, as with all technological advances, one has to inquire if this technology should employ the same modes of instruction as the computer mainframes or minicomputers. As with so many real life situations the answer is both yes and no.

Let us first look at the no option. This author believes that microcomputer technology can be used for classroom instruction as opposed to individualized instruction. In the traditional classroom, students are seated on chairs or benches in front of the black-

board and teacher (see Figure 1). In some advanced classrooms the chairs are mobile and can be arranged in semi-circles, circles, randomly, by groups, or whatever. The teacher may even use some audio visual equipment for slides, movies or television. Essentially what we have is traditionally administered instruction (TAI).

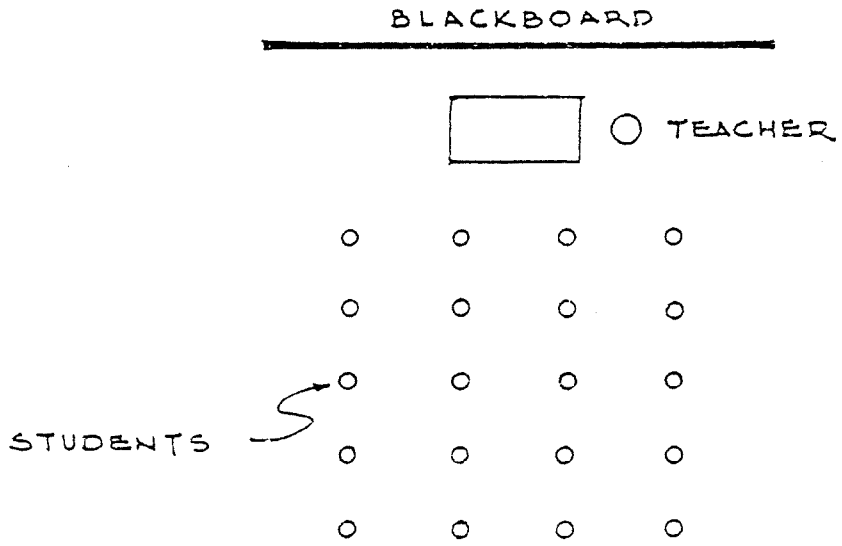

FIG. 1 Traditionally Administered Instruction

Into this setting, we introduce the microcomputer. In the first case the blackboard is replaced by the microcomputer attached to display monitors shown in Figure 2.

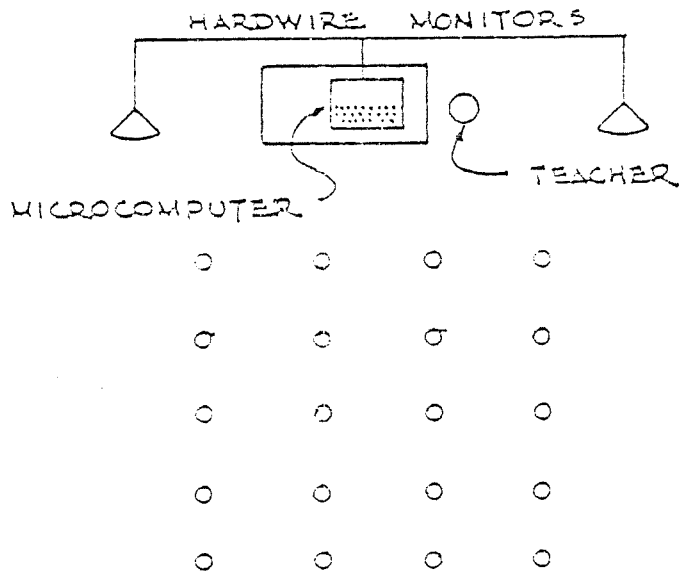

FIG. 2 Microcomputer with TV Monitors

board and teacher (see Figure 1). In some advanced classrooms the chairs are mobile and can be arranged in semi-circles, circles, randomly, by groups, or whatever. The teacher may even use some audio visual equipment for slides, movies or television. Essentially what we have is traditionally administered instruction (TAI).

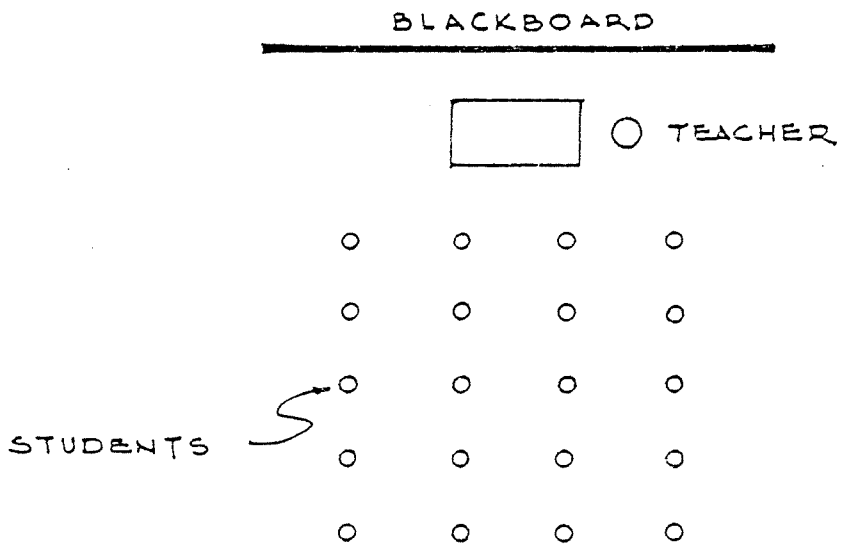

FIG. 1 Traditionally Administered Instruction

Into this setting, we introduce the microcomputer. In the first case the blackboard is replaced by the microcomputer attached to display monitors shown in Figure 2.

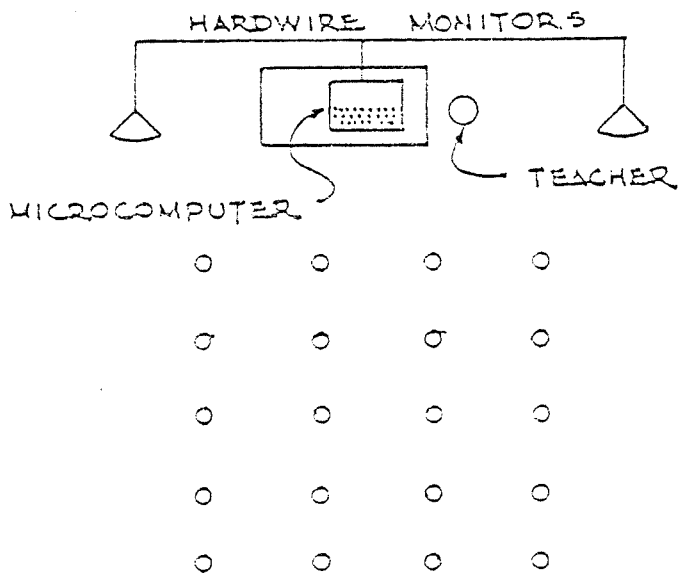

FIG. 2 Microcomputer with TV Monitors

Within the computer memory, the teacher has stored the material to be covered during the course of the lesson. For the expert teacher, through experience, the lesson will contain many modules covering topics that will be raised by students in the question and answer exchange. The COURSEWARE contained in the microcomputer could be prepared by the teacher, if so talented, or it could be provided by a central resource either through purchase or government supply. The teacher, or an appointed monitor, using the keyboard of the computer would select the material from computer storage to be displayed for the students as the lesson progresses.

Where appropriate, student responses would be entered and displayed to all of the class immediately. Materials prepared by the students could also be entered and displayed for analysis and comment by the class. In a more advanced strategy, the monitors could be replaced by a large TV screen display, and we would have the electronic blackboard. Thus, the keyboard becomes the chalk of the teacher while the screen becomes the blackboard seen in Figure 1

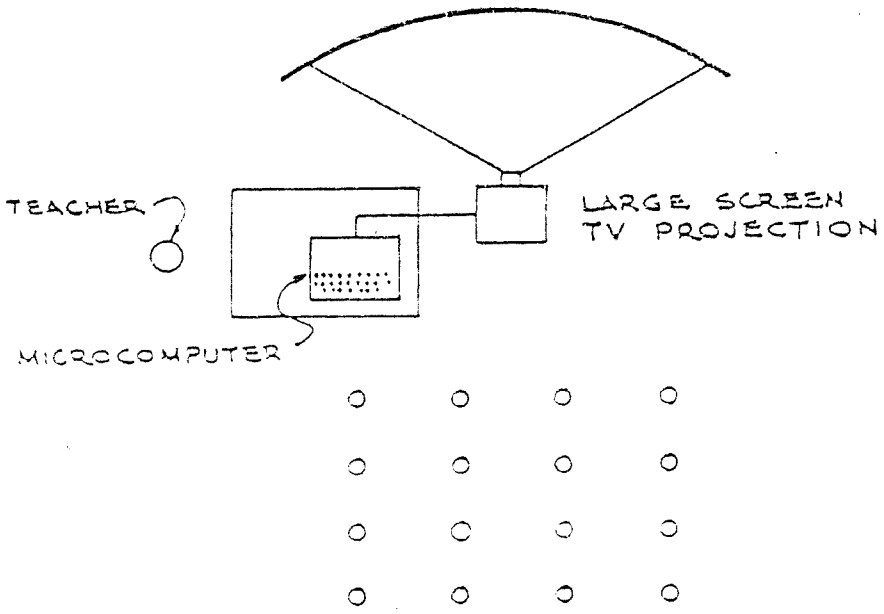

FIG. 3 Microcomputer with Large Screen TV

Key to this strategy is the fact that the material would be carefully planned and prepared to optimize the instructional effect. The instructional material stored magnetically in the computer could be regarded as a very flexible electronic text. By linking several microcomputers to a local network, groupings of students could work with centrally stored materials as indicated in Figure 4. Here the students could participate in "real time" in an instructional game or use a simulation model. Competition or cooperative construction could be the focus of this activity. Materials prepared by one group of students could be displayed immediately to all class perticipants for analysis and comments. The use of a NESTAR CLUSTER or a RADIO SHACK NETWORK would provide a means of linking several computers in a room or different rooms into an instructional network.

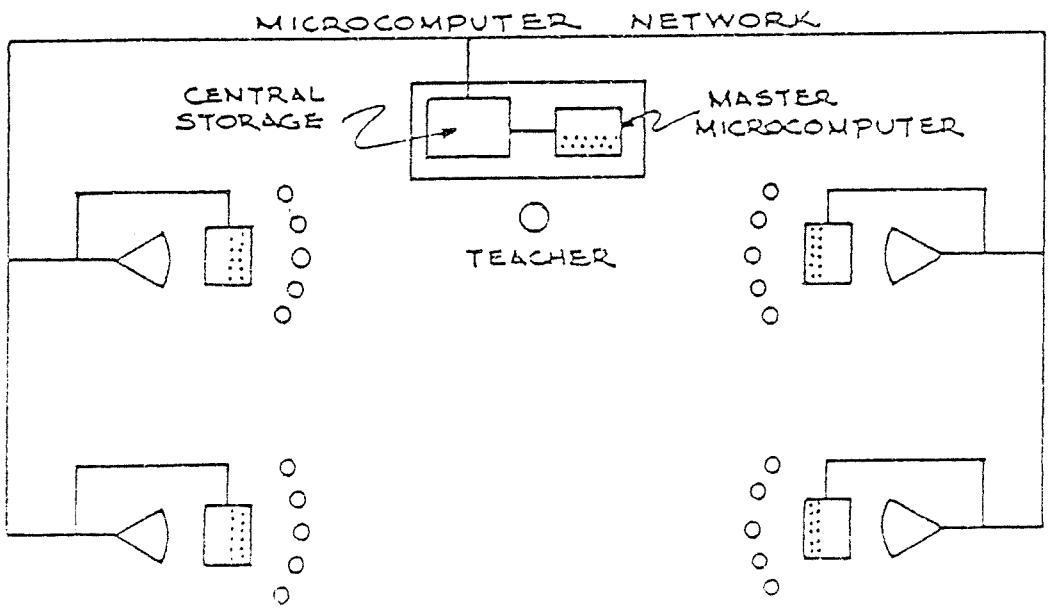

FIG. 4 Microcomputer Network

In such an environment, learning teams could compete; simulation models could be explored and tested; teams could develop materials which interact with the system; materials already programmed could

be researched and modified. The opportunities for instruction are numerous and varied. With this instructional strategy, COLLECTIVIZED CAI, the socialization aspect of learning can be preserved and the cost factors which weighed so heavily against early individualized CAI systems can be overcome. With such a use of computer technology, the teacher now becomes the manager of instruction so that together with classroom student monitors, the computer technology serves to extend the capability of the teacher to direct learning, leaving content, storage and presentation to computer technology.

WHERE SHOULD WE BE?

It suffices to say that classroom instruction has changed little from the seventeenth century, and perhaps earlier. Education is one of the few "cottage industries" remaining in a world that has advanced dramatically in its use of technology. Education has not fully shared in that advance. If one were ill, one would not rest well in a hospital practicing seventeenth century medicine, yet we are quite comfortable using rather ancient instructional techniques to form the human mind.

With existing computer and communications technology instructional COURSEWARE can be moved around an entire nation via satellite and "down loaded" to ground distribution systems for use by local teachers. Such teachers could even move from town to town setting up learning programs in accord with local needs which would draw upon the resources of centrally located institutions of higher learning. These institutions would prepare and store instructional modules based upon specifications prepared by the teachers working with the people at the local level (see Figure 5).

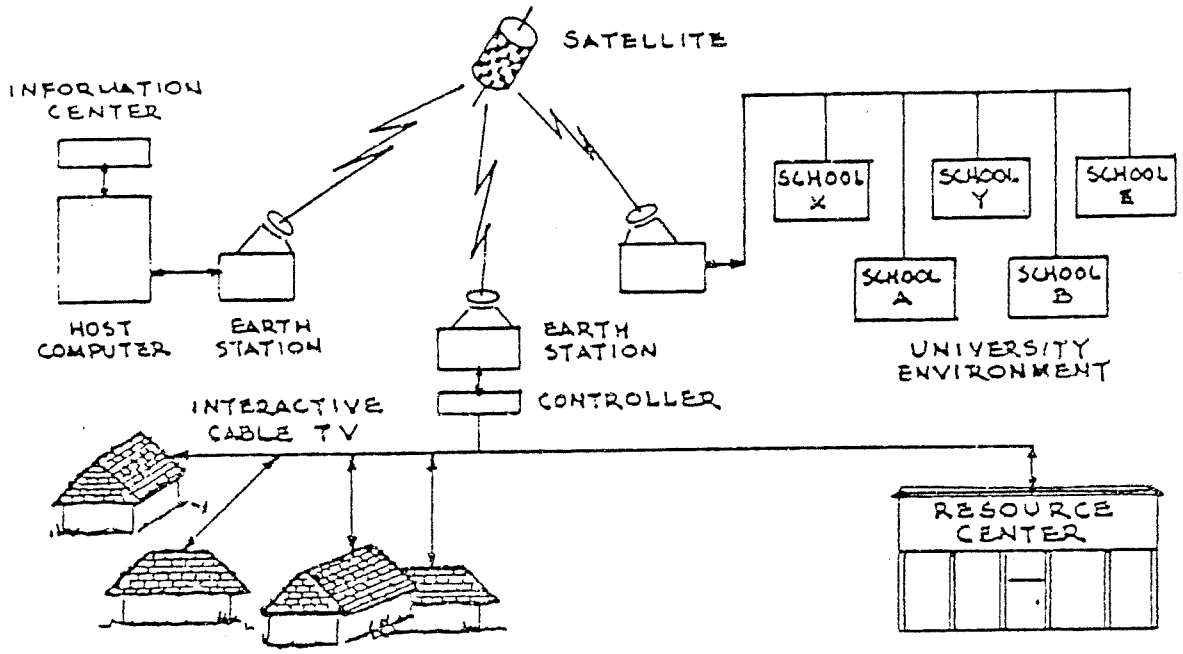

FIG 5 Instructional Network

Also, it should be noted that with such an instructional network, not only would COLLECTIVIZED CAI be available, but in special cases individualized CAI could also be made available in learning centres or homes (8). This is the yes option to question posed earlier in this paper. When one considers the cost of books and printing today, this type of electronic storage and retrieval constitutes an attractive option for sharing limited educational resources (9).

From a more theoretical point of view, educators must consider quite seriously the fact that traditional instructional strategies have been based upon the premise that the human brain is a single channel processor capable of doing only one thing at a time. In a technological information age this must be called into question. Should we allot a 40-minute period to teach astronomy and another 40-minute period to teach English? Or, is it possible with computer

controlled instructional networks for a student interested in astronomy to follow a course taught in English, thereby learning both subjects? Properly prepared introductory level materials using astronomical vocabulary should capitalize on the motivation of interest in astronomy to learn a new language. This author sees no major barriers to such a possible instructional scenario.

Extending the concept further, I believe an American wishing to follow a course in Asian history should be taught by an Asian. The cultural heritage and societal nuances of the Asian will be subtly conveyed to the learner, and perhaps these intangibles teach more than the body of content of the subject. With computer and communications technology, this is a real possibility today.

The human mind is not a single channel processor, but rather a multichannel processor capable of doing more than one thing at a time. Perhaps the utilization of this capability in the process of instruction/learning could transcend national borders, and develop a "global learning village" where not only topical content would be purveyed, but cultural and sociologically differences will be perceived, understood and appreciated.

Massive structures called schools, are not needed to carry out instruction in an electronic age. In an electronic age the package carrying the information can be extremely small, viz., digitized signals. The recetpacles and warehouses of humankind's knowledge can be ROM (Read Only Memory) chips. It is key to civilization that we efficiently store our accumulated knowledge and have it as accessible as possible for our young to learn. No other creature stores the learning of a time so that it can be transmitted to the young.

Today in some of the technologically advanced nations of the world the very technologies we have discussed above are not used to inform and instruct the human mind, but rather they are used to sell unneeded products or spend idle recreation time. Television advertisers are more concerned with hair styles and pomades on the head than the contents of the head. Amusement arcades have video games under microcomputer control which launch rockets, and destroy targets (space ships, planets, stars, etc.). The young line up with a seemingly endless parade of coins to "test their skills" at playing one game or another. In the United State millions of millions of dollars are involved in this misappropriation of potential tools of learning/instruction.

This author does not speak against the human value of recreation, but when the constant objective of one's amusement is to destroy a rocket, an enemy tank, another human, one wonders where recreation ends and programming for violence begins. The average U.S. high school graduate has seen to date on television some 18,000 murderous incidents (some 2.8+ every day of life), as they are being sold jeans, cereal, cars, skin cream, and all the products an affluent society manufactures and "requires". As educators we must ask the question if this is indeed the heritage we wish to leave our young. We must also be wise enough to see that today's child will be the youth of 2000 A.D. Does instructional practice today adequately prepare today's child to be the young adult of the year 2000? How can today's technology be incorporated with its communications potential, data base strategies, etc. help to achieve this goal?

REFERENCES:

1. Anastasio, E.J., and Morgan, J.S. Factors inhibiting the use of computers in instruction. Washington, D.C.: Educom Interuniversity Communications Council, Inc., 1972.

2. David, Brother A. and Williams, R. L. Collectivized CAI. ADCIS 1980 Proceedings. Washington D.C. Association for the Development of Computer-Based Instructional Systems, 1980.

3. Blaisdell, F.J. Historical development of computer assisted instruction. Journal of Educational Technology Systems, 1976-77, 5(2), 155-170.

4. Kopstein, F.F. Why CAI must fail! Englewood Cliffs, NJ: Educational technology Cassettes (audiotape).

5. Leedham, J. Educational technology: a first look. Bath, England: The Pitman Press, 1973.

6. Weizenbaum, J. Computer power and human reason. San Francisco, CA: W.H. Freeman and Co., 1976.

7. Macken, E., and Suppes, P. Evaluation studies of CCC elementary school curriculums: 1971-1975. Palo Alto, CA: CCC Educational Studies, Summer 1976.

8. David, Brother A. ITV, telephone and the computer -- a feasibility study. Audio Visual Communications Review, Winter 1973, 21 (4), 453-465.

9. Taylor, R.P. The computer in the school: tutor, tool, tutee. New York, NY: Teachers College Press, 1980.